Round 1 - Thursday, July 10, 2025

SHOTLINK

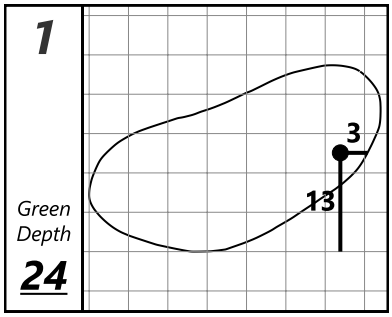

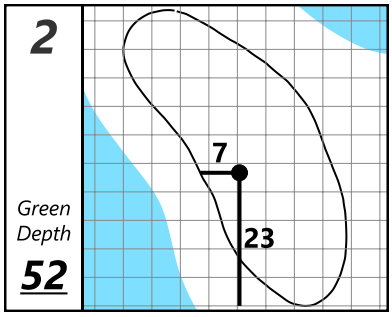

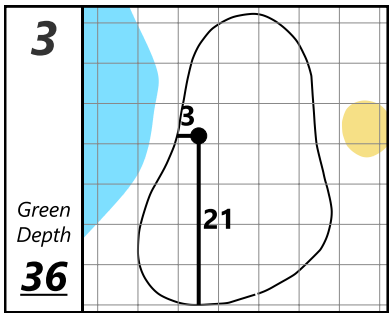

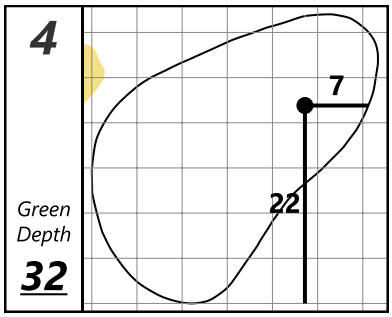

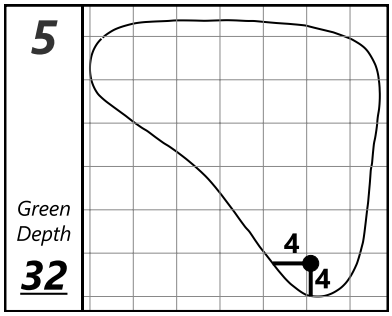

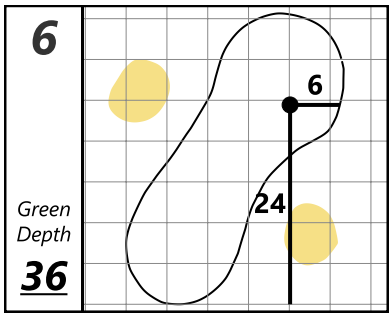

The Ascendant presented by Blue

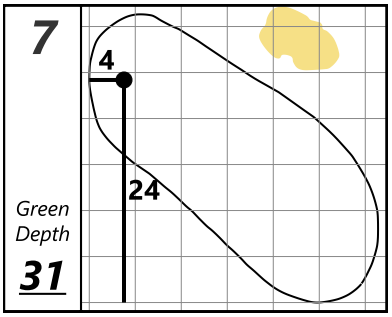

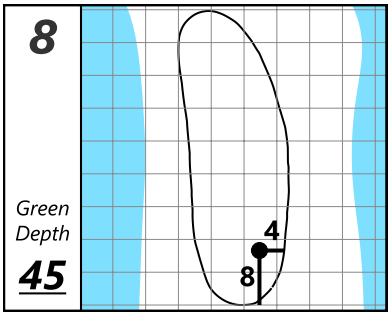

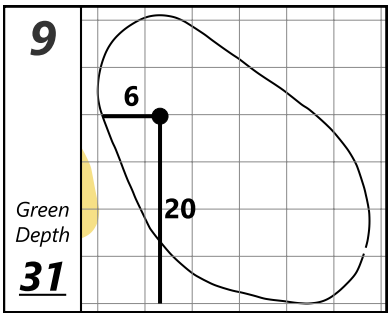

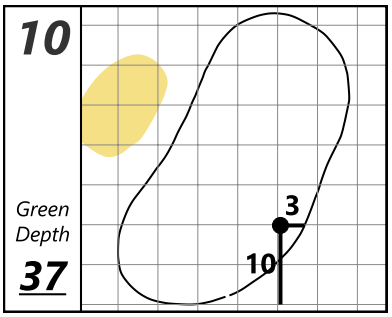

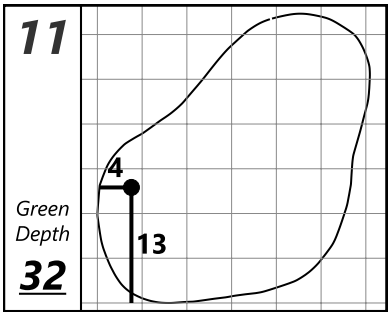

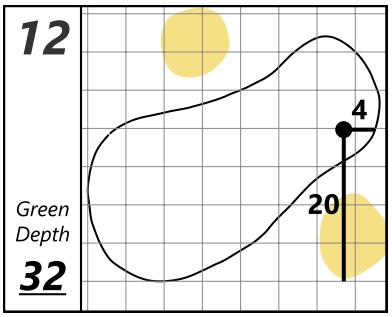

TPC Colorado

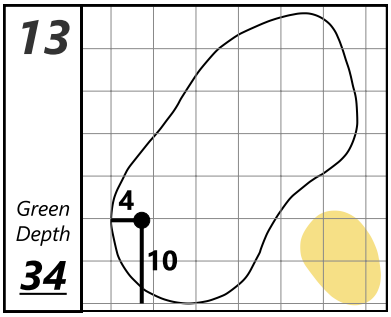

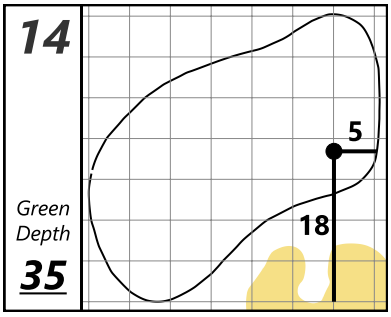

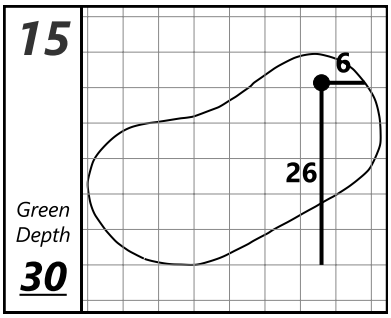

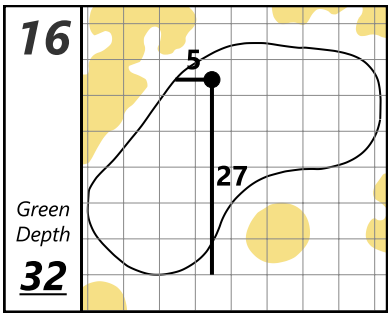

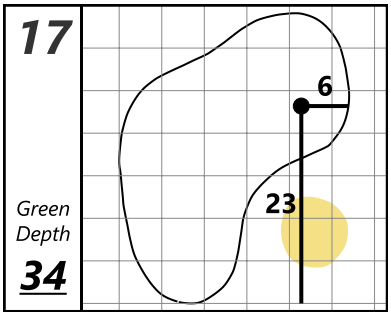

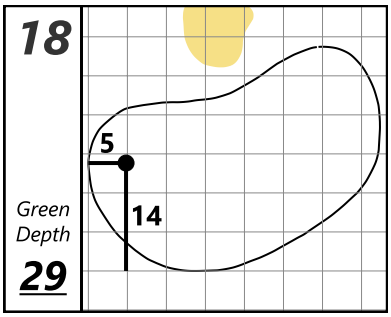

Each side of a complete square on the green represents 5 YARDS

Wednesday, July 9, 2025 9:14 AM